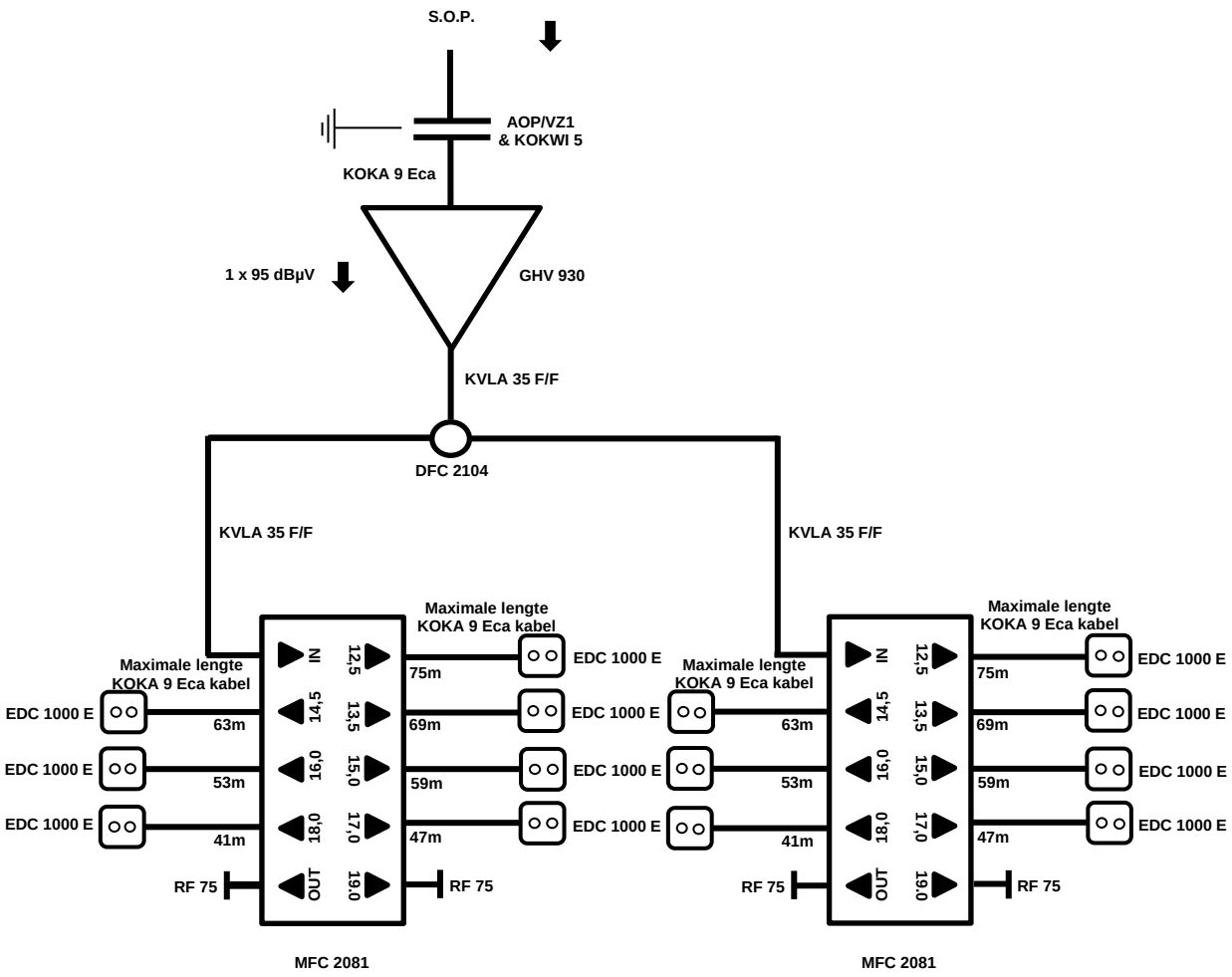
S.O.P.
AOP/VZ1
& KOKWI 5
KOKA 9 Eca
1 x 95 dBµV
GHV 930
KVLA 35 F/F
DFC 2104
KVLA 35 F/F
KVLA 35 F/F
Maximale lengte
KOKA 9 Eca kabel
EDC 1000 E
63m
53m
41m
IN
14,5
16,0
18,0
OUT
12,5
13,5
15,0
17,0
19,0
75m
69m
59m
47m
RF 75
MFC 2081
MFC 2081